Property Location 1579 CROSS HIGHWAY | Map ID 253/ 12/A / / | Bldg Name | State Use 1010
Vision ID 21237 | Account # 21165 | Bldg # 1 | Sec # 1 of 1 | Card # 1 of 1 | Print Date 2/3/2026 12:20:57 AM

## CURRENT OWNER

DAMICO RICHARD & CONNORS KEL

1579 CROSS HIGHWAY

FAIRFIELD CT 06824

| TOPO | | UTILITIES | | STRT / ROAD | | LOCATION | |
|---|---|---|---|---|---|---|---|
| 1 | Level | 2 | Public Water | 1 | Paved | 2 | Suburban |
| | | 4 | Gas | | | X | |
| | | 6 | Septic | | | S | |

## SUPPLEMENTAL DATA

| | | | |
|---|---|---|---|
| Alt Prcl ID | | Legal | 1A JAY C |
| Assoc. | | Descrip | STEVER |
| Lots | | Descrip | |
| I&E SuppF | | Record Ma | 6058,6076 |
| Notice | | Condo Res | |
| Census | | | |
| GIS ID | 253012A0000 | Assoc Pid# | |

## CURRENT ASSESSMENT

| Description | Code | Appraised | Assessed |
|---|---|---|---|
| RES LAND | 1-1 | 1,034,600 | 724,220 |
| DWELLING | 1-3 | 862,700 | 603,890 |
| RES OUTBL | 1-4 | 153,900 | 107,730 |
| | Total | 2,051,200 | 1,435,840 |

6051

FAIRFIELD, CT

**VISION**

## RECORD OF OWNERSHIP

| RECORD OF OWNERSHIP | BK-VOL/PAGE | | SALE DATE | Q/U | V/I | SALE PRICE | VC |
|---|---|---|---|---|---|---|---|
| DAMICO RICHARD & CONNORS KELLI (SV) | 6405 | 0253 | 04-12-2023 | U | I | 2,370,000 | 07 |
| WALLER THOMAS G | 5599 | 0134 | 10-06-2017 | Q | I | 1,582,500 | 00 |
| BLASIUS GLENN & CLARE (SV) | 4205 | 0271 | 10-23-2008 | Q | I | 1,502,500 | 00 |
| NIEROTH ALEX & PAMELA J (SV) | 1868 | 0097 | 08-10-1998 | Q | I | 950,000 | U |
| FRANKLIN SCOTT D & TRACY L | 1275 | 0197 | 07-19-1993 | | | 600,000 | |

## PREVIOUS ASSESSMENTS (HISTORY)

| Year | Code | Assessed | Year | Code | Assessed V | Year | Code | Assessed |
|---|---|---|---|---|---|---|---|---|
| 2025 | 1-1 | 724,220 | 2025 | 1-1 | 724,220 | 2024 | 1-1 | 297,570 |
| | 1-3 | 603,890 | | 1-3 | 837,480 | | 1-3 | 509,600 |
| | 1-4 | 107,730 | | 1-4 | 107,730 | | 1-4 | 107,730 |
| | Total | 1,435,840 | | Total | 1,669,430 | | Total | 914,900 |

## EXEMPTIONS

| Year | Code | Description | Amount |
|---|---|---|---|
| | | Total | 0.00 |

## OTHER ASSESSMENTS

| Code | Description | Number | Amount | Comm Int |
|---|---|---|---|---|

This signature acknowledges a visit by a Data Collector or Assessor

## ASSESSING NEIGHBORHOOD

| Nbhd | Sub | Nbhd Name | B | Tracing | Batch |
|---|---|---|---|---|---|
| 0058 | A | | | | |

## APPRAISED VALUE SUMMARY

| | |
|---|---|
| Appraised Bldg. Value (Card) | 852,200 |
| Appraised Xf (B) Value (Bldg) | 10,500 |
| Appraised Ob (B) Value (Bldg) | 153,900 |
| Appraised Land Value (Bldg) | 1,034,600 |
| Special Land Value | 0 |
| Total Appraised Parcel Value | 2,051,200 |
| Valuation Method | C |
| Total Appraised Parcel Value | 2,051,200 |

## NOTES

IA EL HT 3RD FLR/WD STVE 7X6 SHD1=NV
OB5,6,7-ATTCHDORMER 10/14/
ADDN BUILT 1987/OB# 3 USED AS STUDIO
WITH FULL BATH ADDED 2016
2011 ADDN & TOTAL REHAB 50%
2011 BAA REDUCE ASSESSMENT BY 57,680
2012 ADDN/REMDL 100% FINAL P 6/19/12
ARTIFICIAL SLATE ROOF
10/1/22 162779 CNVRT BARN TO STUDIO*
*PER INSP/PLANS COMP 10/1/22
10/1/23 ISNT GEN FINAL(P)* COMP 23 LIST

## BUILDING PERMIT RECORD

| Permit Id | Issue Date | Type | Description | Amount | Insp Date | % Comp | Date Comp | Comments |
|---|---|---|---|---|---|---|---|---|
| 263670 | 05-03-2022 | GN | | | 10-01-2023 | 100 | 10-01-2023 | INST 24 KW NG GENERATO |
| 162779 | 06-16-2021 | RE | | 60,000 | 10-01-2022 | 100 | 10-01-2022 | CONVERT BARN TO STUDIO |
| 162580 | 05-21-2021 | NA | | 2,404 | | | 05-22-2021 | INST TEMP TENT FOR EVEN |
| 153552 | 03-11-2016 | RE | Remodel | 6,000 | 10-20-2016 | 100 | 03-22-2016 | ADD FULL BTH TO BARN |
| 146876 | 07-29-2011 | AD | Addition | 375,000 | 09-26-2012 | 100 | 06-19-2012 | 2ND FLR ADDN & COMP INT |
| 29140 | 09-22-1998 | AD | Addition | 80,000 | 09-13-1999 | 100 | 09-13-1999 | INT ALTS |

## VISIT / CHANGE HISTORY

| Date | Id | Type | Is | Cd | Purpost/Result |
|---|---|---|---|---|---|
| 01-28-2026 | TL | | | 46 | Change - Value Change C |
| 10-09-2025 | KL | 02 | | 08 | Measur/Int Refusal No inf |
| 05-24-2023 | KBC | | | 43 | Change - Reinspection/Rer |
| 04-21-2023 | KBC | | | 43 | Change - Reinspection/Rer |
| 01-13-2023 | KBC | | | 43 | Change - Reinspection/Rer |
| 10-20-2016 | KC | | | 43 | Change - Reinspection/Rer |
| 10-21-2014 | AD | | | 12 | 1 Visit No Measure allowed |

## LAND LINE VALUATION SECTION

| B | Use Code | Description | Zone | Land Type | Land Units | | Unit Price | Size Adj | Site Index | Cond. | Nbhd. | Nbhd. Adj | Notes | Location Adjustment | Adj Unit P | Land Value |
|---|---|---|---|---|---|---|---|---|---|---|---|---|---|---|---|---|
| 1 | 1010 | Single Fam Resi | AAA | | 87,120 | SF | 9.50 | 1.00000 | 5 | 1.00 | 0058 | 1.250 | | | | 1,034,600 |
| | | Total Card Land Units | | | 87,120 | SF | Parcel Total Land Area | | | 2.00 | | | | Total Land Value | | 1,034,600 |

Property Location 1579 CROSS HIGHWAY | Map ID 253/ 12/A / / | Bldg Name | State Use 1010
Vision ID 21237 | Account # 21165 | Bldg # 1 | Sec # 1 of 1 | Card # 1 of 1 | Print Date 2/3/2026 12:20:58 AM

## CONSTRUCTION DETAIL

| Element | Cd | Description |
|---|---|---|
| Style: | 69 | Historic Home |
| Model | 01 | Residential |
| Grade: | 11 | A |
| Stories: | 2.75 | 2 3/4 Stories |
| Occupancy | 1 | |
| Exterior Wall 1 | 11 | Clapboard |
| Exterior Wall 2 | | |
| Roof Structure: | 06 | Mansard |
| Roof Cover | 04 | Rubber |
| Interior Wall 1 | 05 | Drywall |
| Interior Wall 2 | | |
| Interior Flr 1 | 12 | Hardwood |
| Interior Flr 2 | | |
| Heat Fuel | 03 | Gas |
| Heat Type: | 04 | Forced Air-Duc |
| AC Type: | 03 | Central |
| Total Bedrooms | 03 | 3 Bedrooms |
| Total Bthrms: | 4 | |
| Total Half Baths | 1 | |
| Total Xtra Fixtrs | | |
| Total Rooms: | 8 | 8 Rooms |
| Bath Style: | 02 | Average |
| Kitchen Style: | 02 | Average |
| FCPZ | | |

## CONSTRUCTION DETAIL (CONTINUED)

| Element | Cd | Description |
|---|---|---|
| | | |

## CONDO DATA

| Parcel Id | | C | | Owne | 0.0 |
|---|---|---|---|---|---|
| | | B | | S | |

| Adjust Type | Code | Description | Factor% |
|---|---|---|---|
| Condo Flr | | | |
| Condo Unit | | | |

## COST / MARKET VALUATION

| | |
|---|---|
| Building Value New | 1,420,292 |
| Year Built | 1874 |
| Effective Year Built | |
| Depreciation Code | 5 |
| Remodel Rating | |
| Year Remodeled | |
| Depreciation % | 40 |
| Functional Obsol | 0 |
| External Obsol | 0 |
| Trend Factor | 1 |
| Condition | |
| Condition % | |
| Percent Good | 60 |
| Cns Sect RcnId | 852,200 |
| Dep % Ovr | |
| Dep Ovr Comment | |
| Misc Imp Ovr | |
| Misc Imp Ovr Comment | |
| Cost to Cure Ovr | |
| Cost to Cure Ovr Comment | |

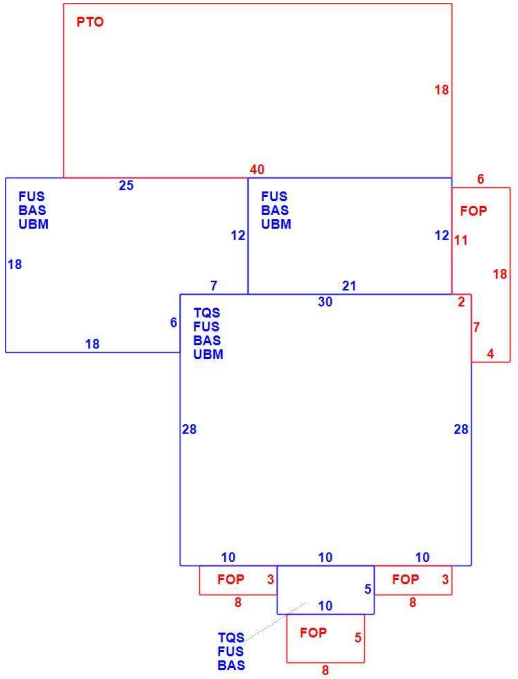


## OB - OUTBUILDING & YARD ITEMS(L) / XF - BUILDING EXTRA FEATURES(B)

| Code | Descript | Sub | Sub Ty | L/B | Units | Unit Pric | Yr Blt | Cond. C | % Gd | Grade | Grade A | Appr. V |
|---|---|---|---|---|---|---|---|---|---|---|---|---|
| SPL4 | IGPOOL | | | L | 756 | 37.00 | 2001 | | 90 | | 0.00 | 25,200 |
| CAB2 | W/PLU | | | L | 504 | 87.00 | 2001 | | 90 | | 0.00 | 39,500 |
| SHP2 | WORK | | | L | 640 | 23.00 | 2001 | | 90 | | 0.00 | 13,200 |
| BRN3 | 1 STOR | | | L | 1,430 | 26.00 | 2001 | | 90 | | 0.00 | 33,500 |
| BRN1 | BARN - | | | L | 640 | 43.00 | 2001 | | 90 | | 0.00 | 24,800 |
| SHD1 | SHED F | | | L | 620 | 16.50 | 2001 | | 90 | | 0.00 | 9,200 |
| FPL3 | 2.0 STO | | | B | 1 | 7500.00 | 2000 | | 60 | | 0.00 | 4,500 |
| PAT2 | PATIO- | | | L | 550 | 15.50 | | | 100 | | 0.00 | 8,500 |
| GENB | GENER | | | B | 1 | 10000.0 | 2022 | | 60 | | 0.00 | 6,000 |

## BUILDING SUB-AREA SUMMARY SECTION

| Code | Description | Living Area | Floor Area | | Unit Cost | Undeprec Value |
|---|---|---|---|---|---|---|
| BAS | First Floor | 1,550 | 1,550 | | 336.56 | 521,671 |
| FOP | Porch, Open, Finished | 0 | 182 | | 66.57 | 12,116 |
| FUS | Upper Story, Finished | 1,550 | 1,550 | | 336.56 | 521,671 |
| PTO | Patio | 0 | 720 | | 33.66 | 24,232 |
| TQS | Three Quarter Story | 712 | 890 | | 269.25 | 239,632 |
| UBM | Basement, Unfinished | 0 | 1,500 | | 67.31 | 100,969 |
| | Ttl Gross Liv / Lease Area | 3,812 | 6,392 | 4,220 | | 1,420,291 |



253012A0000 11/25/2024